CHAMPION

10–3000 SCFM | REFRIGERATED COMPRESSED AIR DRYERS

CRN Series



Durability Delivered

Champion CRN Series refrigerated air dryers are engineered to benefit you today and tomorrow. Quality components and engineering excellence meld to ensure you receive stable ISO Quality Class 4–5 pressure dew point. These exclusive compressed air preparation packages combine reliability, cutting-edge design and innovative packaging into a single space-saving unit. The air quality delivered from an CRN Series dryer may define the difference between moderate and superior results from your plant's processes or systems.

CRN Series dryers benefit you with:

1. Three levels of Intelligence Controller (I-Controller) packages allow you to customize the CRN Series dryers to meet your specific requirements.
2. Select Heat Exchanger arrangements to ensure you get the right combination of value and efficiency in every size. This secures your investment today and tomorrow with energy efficiency.
3. Combination Separator/Filter that incorporates our 99% efficient 3 micron Grade B elements. This ensures consistent water removal, especially under low flow conditions.



Built To Perform

Package Design

At first glance, the ruggedness and ease of serviceability engineered into each CRN dryer becomes apparent. Fabricated from solid steel, the corrosion resistant epoxy powder paint and the fit and finish of the cabinet foretell the quality found within. Easy interior access and user-friendly serviceability translate to reduced maintenance costs.

Proven Performance

All models use reliable refrigeration compressors and environmentally friendly refrigerants. Models up to 500 scfm use proven reciprocating refrigeration compressors and models 600–3,000 scfm incorporate rugged scroll compressors. You benefit from long component life and exceptional around-the-clock performance.

High Performance Separator/Filter

Effective moisture removal at all flow rates is the key to maintain dew point stability. CRN25 and larger includes CFL Series Grade B two-stage cold filtration to ensure maximum water removal even under low flow conditions. Stage one separation, with dual stainless steel orifice tubes, removes bulk liquids and solids greater than 10 micron. Stage two utilizes in-depth fiber media to coalesce water droplets and captures solid particles 3 microns and larger.

Effective Heat Transfer

CRN10–15 models have the patented static condenser technology that eliminates the need for a cooling fan. These models include an on/off switch, longer power cord (8 ft) and pneumatically operated float drain.

CRN Series models 25–3,000 incorporate heat exchangers crafted from multiple offset layers of press formed AISI 316 stainless steel. Press forming creates peaks and valleys that form media channels that optimize fluid turbulence. This prevents fouling and maximizes energy efficiency.

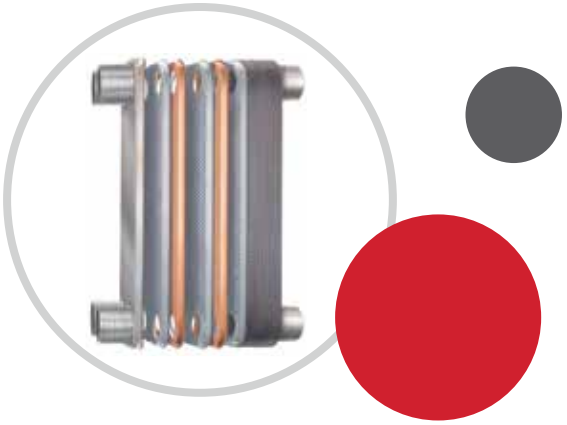

Get Connected

The extended inlet/outlet connections on CRN dryers (CRN25–CRN750) were engineered with foresight to readily accept all CFL Series Filters without the need for cumbersome adaptors and fittings. CRN1000–3000 inlet/outlet connections are on top of unit for ease of installation. Gain the installation flexibility needed today preparing you for the changes of tomorrow.

Air Treatment Systems

The flexibility engineered into every CRN dryer allows you to satisfy your air quality requirements with a single package. Enlist Champion to deliver the dew point stability, air quality, energy efficiency and product reliability that you expect.

ISO 8573.1 Air Quality Classes

1992 earmarked the year the International Organization for Standardization (ISO) established ISO 8573.1 as the global benchmark for evaluating the quality of compressed air. Thus, providing engineers with a universally accepted unit of measure for quantifying compressed air stream contaminants. Namely solid particulates, moisture, and oil.

STANDARDS PER ISO 8573.1

QUALITY CLASSES	SOLID CONTAMINANTS (MAXIMUM PARTICLE SIZE IN MICRONS)	MAXIMUM PRESSURE DEW POINTS		MAXIMUM OIL CONTENT (DROPLETS, AEROSOLS & VAPOR PPM)	
		°F	°C	W/W	MG/M³
0	as specified	as specified		as specified	
1	0.1	-94	-70	0.008	0,01
2	1	-40	-40	0.08	0,1
3	5	-4	-20	0.8	1
4	15	38	3	4	5
5	40	45	7	21	25
6	-	50	10	-	-

CRN SERIES PACKAGES DELIVER:

	ISO 8573.1 QUALITY CLASS RATINGS		
CRN SERIES	SOLIDS	MOISTURE*	OIL
As Standard, Grade B	3	4–5	5
with Cold Coalescer Option	1	4–5	1
with an optional external Grade G CFL Filter (shown attached)	1	4–5	0**

* Select models 100–3000 scfm deliver Class 4 dew points. Refer to the CAGI data sheets. CRN25–75 deliver 43-44 F dew points, Class 5. Class 4-5 accounts for all flow models. Refer to CAGI data sheets for dew point performance flow models 200–1000 scfm.
** Quality Class 0 reflects "as specified" level of cleanliness. The addition of an optional external Grade G Filter achieves 0.003 ppm w/w for technically Oil-Free air.





Premium Warranty

2 Years—Standard
3 Years—Extended
5 Years—Total

Parts and labor included.
Contact your local distributor for more details.

Take Control

CRN Series dryers are equipped with control schemes that are designed to provide you with the most value delivered within each flow range. Engineered with industry leading features, each I-Controller package provides just the right level of benefits to appeal to the most challenging applications and demanding customers.

Instrumentation

Power-on LED and 8 foot grounded power cord are standard on all single-phase 115-volt units. Easy view angular instrumentation panels prominently display all I-Controllers instrumentation packages.

I-Controller Level 1

Standard equipment on models CRN25 through CRN100 includes: On/Off rocker switch, green power on light, temperature indicator and pneumatic, pilot-operated drain trap. Easy to monitor display panel.



I-Controller Level 2

Standard equipment on models CRN125 through CRN750 includes: “Power-on” LED, “Compressor-on” LED, On/Off rocker switch, dew point bar graph LED display. Timed solenoid drain trap with push-to-test button and secondary manual drains complete with by-pass valves and drain lines are standard equipment. This helps keep the surrounding area clean and dry and helps you avoid having to shutdown the dryer during drain valve maintenance. Easy view angular panel.



Compare These Features—
Unmatched In The Industry!

I-Controller Level 4

Standard equipment on models CRN1000 through CRN3000 includes: manual mode, schedule mode to synchronize operation to your workday, auto restart, text display window that displays current time, operating mode, total operating hours, hours to service, dew point bar graph LED display, compressor-on light, power-on light, temperature indicator, alarm/service light, reset button, set/run button, programming buttons, on/off button, drain push-to-test button, English, Spanish, German, French and Italian language selectable, RS-232 communication capable, fault condition diagnostics with text display, dry contacts for high dewpoint remote alarm at 55° F. Easy view angular panel.





Refrigeration Circuit

CRN Series dryers enlist proven components and modern materials to deliver the durability you expect from Champion. Hot, moist incoming compressed air enters the Precooler/Reheater (1) where it is precooled by the cold dehydrated airstream. Environmentally friendly low-pressure refrigerant gas is pressurized in the refrigeration compressor. (2) Once compressed into a high-pressure gas, it then flows through the condenser (3) and changes to a cold 35° F liquid. The thermal expansion valve (4) precisely meters the cold liquid refrigerant into the evaporator (5) where the work is done. Hot, saturated compressed air enters the evaporator at the end opposite the incoming liquid refrigerant. The compressed air is chilled as they cross paths. Water is condensed out of the cold exiting air and is efficiently removed in the Separator/3 micron Filter (6). The cold air stream then flows through (7) the Cold Coalescing Oil Removal Filter (optional on models CRN25–CRN3000) where oil droplets and aerosols to 0.008 ppm w/w are captured and removed. The exiting cold, dry compressed air then reenters the Precooler/Reheater (1) where it is reheated by the hot incoming air to prevent pipe sweating in your plant. Finally, the warm refrigerant is now a low-pressure gas and returns to the suction-side (8) of the refrigeration compressor to continue the process.

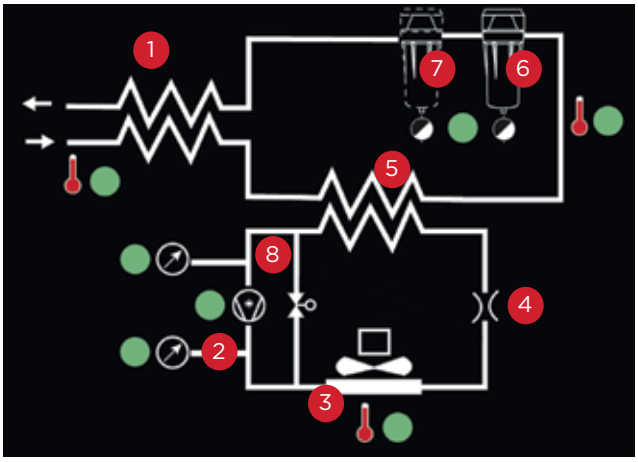

1. Precooler/Reheater
2. Refrigeration Compressor
3. Condenser
4. Thermal Expansion Valve
5. Evaporator
6. Moisture Separator/ 3 micron Filter
7. Optional Cold Coalescing Oil Removal Filter
8. Suction-side

CRN10–15

Warm saturated air enters the Evaporator (A), where it is cooled by an air-to-refrigerant process. Water vapor condenses into a liquid for removal at the moisture separator (B) by an Automatic Drain (C). The cold, dry air is reheated as it passes through the Reheater (D) while the patented Static Condenser (E) radiates waste heat to ambient. This eliminates the need for a cooling fan and prevents pipeline sweating at the air outlet.

A Constant Pressure (F) Expansion Valve (CPEV) modulates the flow of liquid refrigeration to the Evaporator (A). This eliminates freeze-ups and assures continuous, automatic dew point control. The CPEV responds to pressure changes as the refrigerant leaves the Evaporator. This maintains the proper cooling rate under all load conditions. The CPEV is adjusted at the factory to deliver automatic operation.

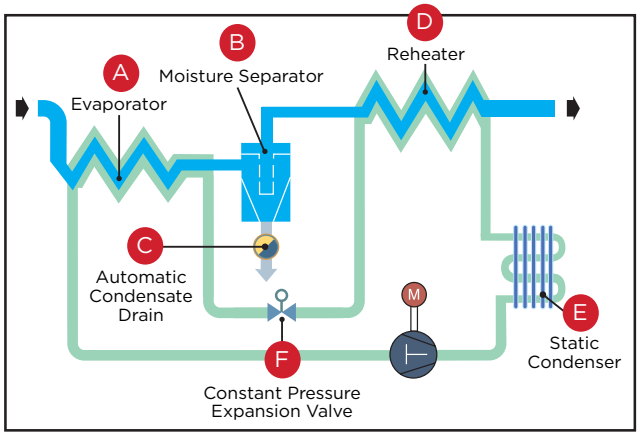

- A Evaporator
- B Moisture Separator
- C Automatic Drain
- D Reheater
- E Static Condenser
- F Constant Pressure Expansion Valve

We Have a Legacy of Inventing Original Solutions

System Options

Power-on LED and 8 foot grounded power cord are standard on all single-phase 115-volt units.
Easy view angular instrumentation panels prominently display all I-Controllers instrumentation packages.

OPTION FEATURE OVERVIEW

CONTROL VERSION	LED INDICATOR LIGHTS			DRAIN VALVES			SYSTEM UPGRADES	
	POWER-ON	COMPRESSOR-ON	DEW POINT INDICATION	PNEUMATIC PILOT-OPERATED	TIMED DRAIN WITH PUSH-TO-TEST*	DEMAND DRAIN WITH OIL REMOVAL FILTER	COLD COALESCING OIL REMOVAL FILTER	VACUUM FLUORESCENT TEXT DISPLAY
I-Controller Level 1	S	S	S	S	-	-	O	-
I-Controller Level 2	S	S	S	-	S	-	O	-
I-Controller Level 4	S	S	S	-	-	-	O	S

S = Standard Feature; O = Optional Feature; * Secondary manual drains complete with by-pass valves are standard equipment and only available on packages with Level 2, and Level 4 I-Controllers. This helps keep the area clean and dry and helps you avoid dryer shutdown during drain valve maintenance.

Oil Removal

This option integrates our factory installed CFL Series Grade E Cold Coalescing Oil Removal Filter. Oil droplets and aerosols are extracted from the air stream in cleaning it down to 0.008 ppm w/w and solids are retained down to 0.01 micron. CRN Series dryers that include the Cold Coalescing Oil Removal Filter option are also equipped with a dedicated drain trap. Drain trap is consistent with the type provided with your chosen I-Controller. Available on models CRN25–CRN3000.

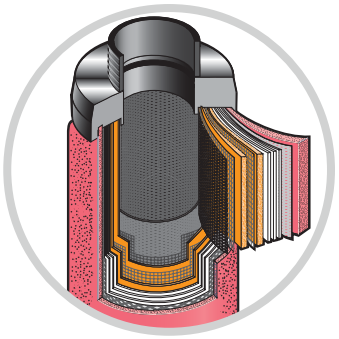



Gauges

Four panel mounted gauges: air inlet temperature, air outlet pressure, refrigerant suction pressure and refrigerant head pressure.

Dry Contacts

Remote bulb temperature switch with”C”-Form contacts; mounted inside cabinet.

Air-Bypass Piping

Three valve block and bypass: mounts to inlet/outlet connections and ships loose. MWP 200 psig.

CRN SERIES REFRIGERATED DRYER SPECIFICATIONS

MODEL CRN	RATED FLOW[1]	STANDARD CONTROLLER[2]	CONNECTION (IN)[3]	DIMENSIONS (IN) H	W[4]	D	WEIGHT LBS	W/OIL REMOVAL FILTER LBS	VOLTAGES (V/PH/HZ)	KW
10	10	On/Off Switch	⅜" OD	14	11	16	64		115/1/60	
15	15		⅜" OD	14	11	16	69			
25	25	I-Controller Level 1	½" NPT	26	20.5	18	86	147	115/1/60 208-230/1/60 220-240/1/50	.21
35	35		½" NPT	26	20.5	18	90	151		.25
50	50		½" NPT	26	20.5	18	95	157		.41
75	75		¾" NPT	26	20.5	18	106	216		.59
100	100		1" NPT	38	29	20	251	258		.93
125	125	I-Controller Level 2	1" NPT	38	29	20	273	281		1.28
150	150		1" NPT	38	29	20	279	287		1.30
200	200		1½" NPT	39	34	32	425	438	208-230/3/60 460/3/60 575/3/60 380-420/3/50	1.26
250	250		1½" NPT	39	34	32	463	476		1.96
300	300		1½" NPT	46	35	32	527	540		2.00
400	400		2" NPT	46	35	32	571	603		2.03
500	500		2½" NPT	58	32	42	684	716		2.68
600	600		2½" NPT	58	32	42	646	691		3.06
750	750		2½" NPT	58	32	42	734	804		4.32
1000	1000	I-Controller Level 4	3 ANSI flange	85	49	41	1146	1173		6.13
1250	1250		4 ANSI flange	85	49	51	1521	1548		7.29
1500	1500		4 ANSI flange	85	49	51	1547	1574		9.47
1750	1750		6 ANSI flange	85	55	60	1940	1994		11.3
2000	2000		6 ANSI flange	85	55	60	1986	2040		11.5
2500	2500		6 ANSI flange	85	55	60	2315	2369		15.0
3000	3000		6 ANSI flange	85	55	60	2646	2700		19.7

TABLE 1 — CORRECTION FACTORS (MULTIPLIERS) FOR INLET AIR TEMPERATURE & PRESSURE

INLET PRESSURE (PSIG)	INLET TEMPERATURE 80° F (27° C)	90° F (32° C)	100° F (38° C)	110° F (43° C)	130° F (54° C)
50	1.35	1.05	0.84	0.69	.44
80	1.50	1.17	0.95	0.79	.52
100	1.55	1.23	1.00	0.82	.56
125	1.63	1.31	1.07	0.91	.61
150	1.70	1.37	1.13	0.95	.64
175	1.75	1.42	1.18	0.99	.68
200	1.80	1.47	1.22	1.03	.72

TABLE 2 — CORRECTION FACTORS FOR AMBIENT TEMPERATURE

AMBIENT TEMPERATURE	80° F (27° C)	90° F (32° C)	100° F (38° C)	110° F (43° C)
Multiplier	1.12	1.06	1.00	0.94

Refrigerant: CRN10-CRN750 use R-134a, models CRN1000-CRN3000 use R-404a

Maximum operating pressure: 232 PSIG

Maximum operating temperature: 130° F:

1) Rated Flow Capacity - Compressed air at dryer inlet: 100 psig and 100° F saturated; ambient temperature: 100° F; operating on 60 Hz power supply.
2) I-Controller Level 4 is standard on CRN1000-CRN3000
   I-Controller Level 2 is standard on CRN125-CRN750
   I-Controller Level 1 is standard on CRN25-CRN100
3) OD connection is tubing: NPT connections are male
4) Add 2 inches for Inlet/Outlet connections (does not apply to CRN10-CRN15 or CRN1000-CRN3000)
5) CSA/UL and CE certified
6) Units are air-cooled as standard. Contact your local Distributor if water-cooled versions are required.

CAPACITY CORRECTION FACTORS

To adjust dryer capacity for conditions other than rated, use Correction Factors (multipliers) from Tables 1 and 2.

Example: What is the capacity of a 1,000 scfm model when the compressed air at the inlet to the dryer is 150 psig and 100° F (38° C), and the ambient temperature is 90° F (32° C)?

Answer: 1,000 scfm (rated flow from Specifications Table) × 1.13 (correction factor for inlet temperature and pressure from Table 1) × 1.06 (correction factor for ambient temperature from Table 2) = 1,198 scfm

50 Hz operation: Deregulate for 50 Hz operation. Apply the correction factor of .8333 to flow temperature and pressure.

Champion is committed to delivering superior products built with the exceptional standards you expect.

CHAMPION®

1301 North Euclid Avenue
Princeton, Illinois 61356 USA
866-276-4330
www.ChampionPneumatic.com

Product specifications and materials are subject to change without notice.

©2018 Gardner Denver, Inc. Printed in U.S.A.
CA-CRN 1st Ed. 3/18
Supersedes CA-CRN-100 5th Ed. 12/14

Please recycle after use.